POWERED BY ENDURA
DOOR COMPONENTS MADE IN THE USA

"FusionFrame"
Continuous Head & Sill Frame System
INSWING / OUTSWING
"IMPACT"

L F Schmidt

L. F. SCHMIDT LICENSE No. 43409 STATE OF FLORIDA PROFESSIONAL ENGINEER

Digitally signed by Lyndon F Schmidt
Date: 2023.07.12 10:36:49 -04'00'

This item has been digitally signed and sealed by **L. F. Schmidt, P.E.** on the date adjacent to the seal.

Printed copies of this document are not considered signed and sealed and the signature must be verified on any electronic copies.

THIS PRODUCT APPROVAL IS VALID ONLY FOR THE STATE OF FLORIDA

GENERAL NOTES

1. *This product has been evaluated and is in compliance with the 8th Edition (2023) Florida Building Code (FBC) structural requirements including the "High Velocity Hurricane Zone" (HVHZ).*
2. *Product anchors shall be as listed and spaced as shown on details. Anchor embedment to base material shall be beyond wall dressing or stucco.*
3. *When used in the "HVHZ", this product complies with Section 1626 of the FBC and does not require an impact resistant covering.*
4. *This "IMPACT" door jamb, mullion, weatherstripping and thresholds, as components, are to be used in combination as a substitute for similar components in an impact approved continuous head & sill (complies with Section 1626 of the FBC) door system possessing a current Florida Statewide Product Approval (Including the "HVHZ").*
5. *The design pressure of the assembly shall be the lesser of the design pressure for the component assembly shown in this approval or the design pressure of the system assembly used in conjunction with this approval.*
6. *The maximum frame size of the door assembly shall be lesser of the maximum frame size stated in this approval or the maximum frame size of the system assembly approval used in conjunction with this approval.*
7. *Refer to the separate Florida Product Approval for the swing door used in conjunction with this component approval to determine the ability of the system to meet the water infiltration requirements for the "HVHZ".*
8. *Air and water infiltration qualifications to be reviewed by the Building Official.*
9. For 2x stud framing construction, anchoring of these units shall be the same as that shown for 2x buck masonry construction.
10. *Site conditions that deviate from the details of this drawing require further engineering analysis by a licensed engineer or registered architect.*

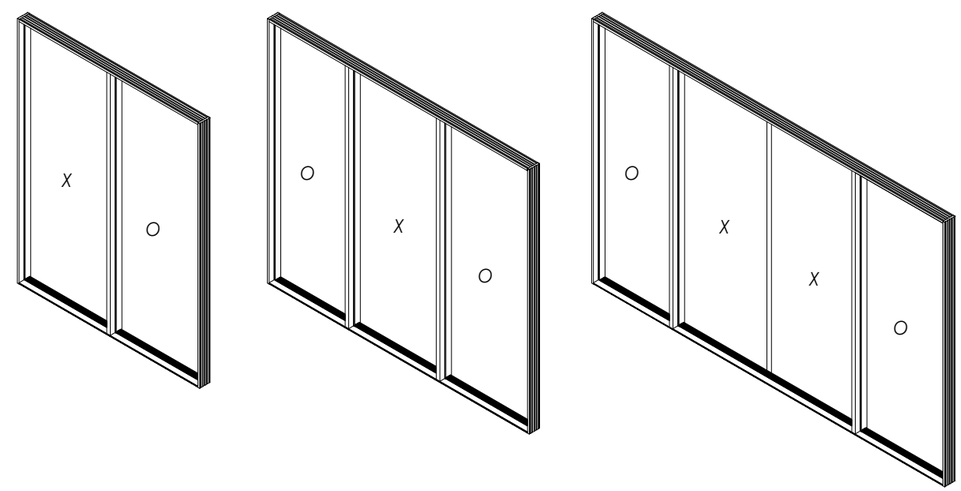

CONFIGURATION	MAX. FRAME DIMENSION	DESIGN PRESSURE (PSF) INSWING		DESIGN PRESSURE (PSF) OUTSWING	
		POSITIVE	NEGATIVE	POSITIVE	NEGATIVE
OX/XO	74.5" x 98.0"	+50.0	-50.0	+50.0	-50.0
OXO	112.75" x 98.0"	+50.0	-50.0	+50.0	-50.0
OXXO	149.5" x 98.0"	+50.0	-50.0	+50.0	-50.0

TABLE OF CONTENTS

SHEET #	DESCRIPTION	SHEET #	DESCRIPTION
1	Typical elevations, design pressures & general notes	7	Vertical Cross Sections (Thresholds)
2	Elevations	8	2X Buck Anchoring (O/X, X/O, OXO)
3	Horizontal & Vertical Cross Sections (2X Buck)	9	2X Buck Anchoring (OXXO)
4	Horizontal & Vertical Cross Sections (1X Buck)	10	Frame Anchoring (O/X, X/O, OXO) & Hardware Details
5	Horizontal & Vertical Cross Sections (Direct to Masonry)	11	Frame Anchoring (OXXO) & Hardware Details
6	Horizontal Cross Sections	12	Bill of Materials & Components

Documents Prepared By:
Lyndon F. Schmidt
P.E. No. 43409
RW BUILDING CONSULTANTS, INC.
P.O. Box 230, Valrico, FL 33595
Phone No.: 813.659.9197
FBPE Registry No. 9813

PRODUCT: ENDURA COMPONENTS

PART OR ASSEMBLY: TYPICAL ELEVATION, DESIGN PRESSURES & GENERAL NOTES

NO.	DATE	REVISIONS	BY
3	7/06/23	UPDATE TO 8TH ED. (2023) FBC	LFS
2	8/03/20	UPDATE TO 7TH ED. (2020) FBC	LFS
1	6/18/19	REVISE D.P. FOR NEW TESTING	LFS

DATE: 4/01/19
SCALE: N.T.S.
DWG. BY: RW
CHK. BY: LFS
DRAWING NO.: FL-25610.12
SHEET 1 OF 12

© 2019 R.W. Building Consultants Inc.

Z:\2023 FBC Drawings\Endura Products\FL-25610 R10\FL-25610.12.dwg

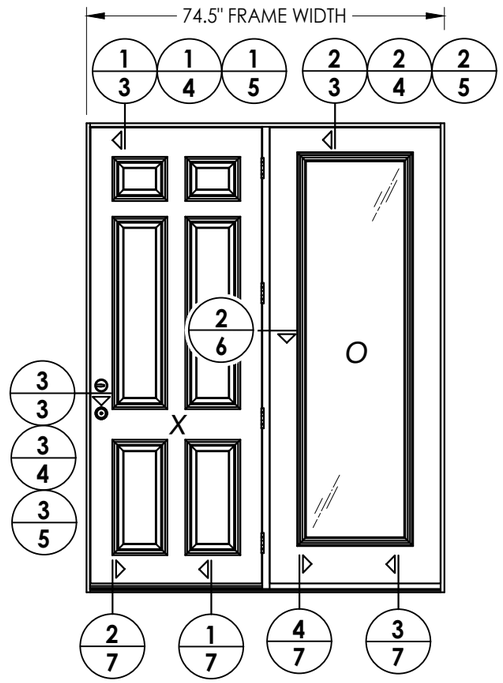

SINGLE DOOR (CENTER HINGED) w/ SIDELITE
(Shown with opaque door)

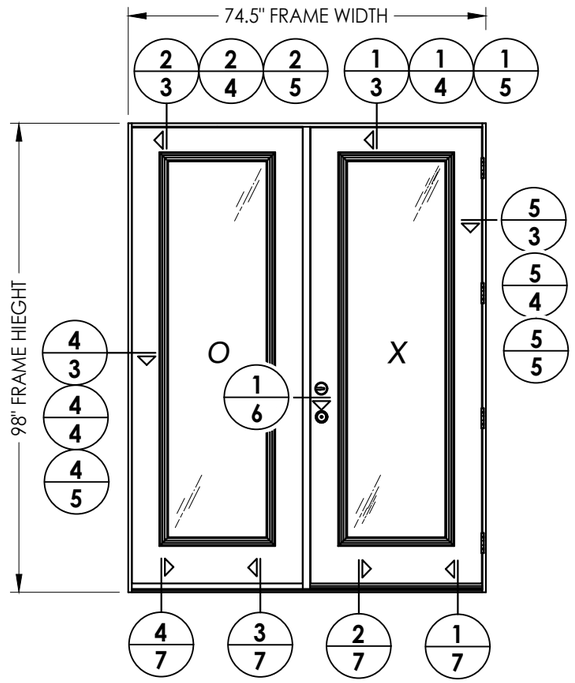

SINGLE DOOR w/ SIDELITE
(Shown with glazed door)

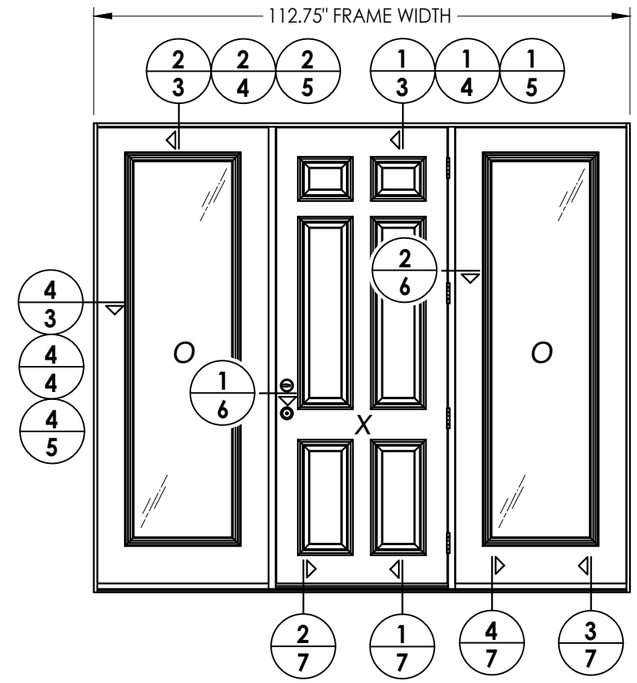

SINGLE DOOR w/ SIDELITES
(Shown with opaque door)

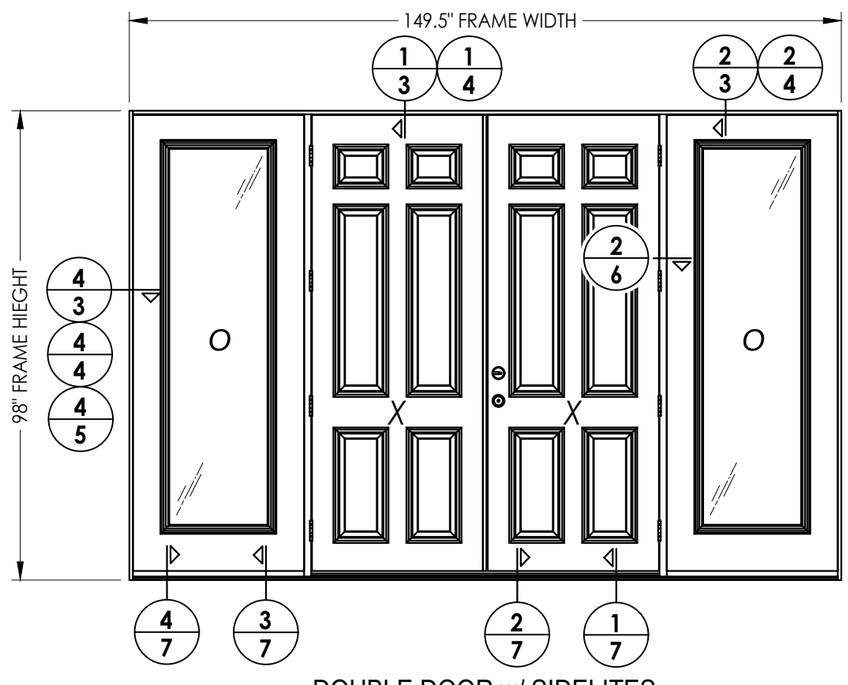

DOUBLE DOOR w/ SIDELITES
(Shown with opaque door)

NOTE:
SEE SEPARATE SIDE-HINGED DOOR & SIDELITE FLORIDA PRODUCT APPROVAL FOR DOOR & SIDELITE CONSTRUCTION DETAILS NOT SHOWN, INCLUDING LOCK HARDWARE, ASTRAGAL & HINGE CONNECTIONS.

Documents Prepared By:
Lyndon F. Schmidt
P.E. No. 43409

RW BUILDING CONSULTANTS, INC.
P.O. Box 230, Valrico, FL 33595
Phone No.: 813.659.9197
FBPE Registry No. 9813

PRODUCT: ENDURA COMPONENTS

PART OR ASSEMBLY: ELEVATIONS

REVISIONS

NO.	DATE	BY
3	7/06/23 UPDATE TO 8TH ED. (2023) FBC	LFS
2	8/03/20 UPDATE TO 7TH ED. (2020) FBC	LFS
1	6/18/19 REVISE D.P. FOR NEW TESTING	LFS

DATE: 4/01/19
SCALE: N.T.S.
DWG. BY: RW
CHK. BY: LFS
DRAWING NO.: FL-25610.12
SHEET 2 OF 12

© 2019 R.W. BUILDING CONSULTANTS INC.

Z:\2023 FBC Drawings\Endura Products\FL-25610 R10\FL-25610.12.dwg

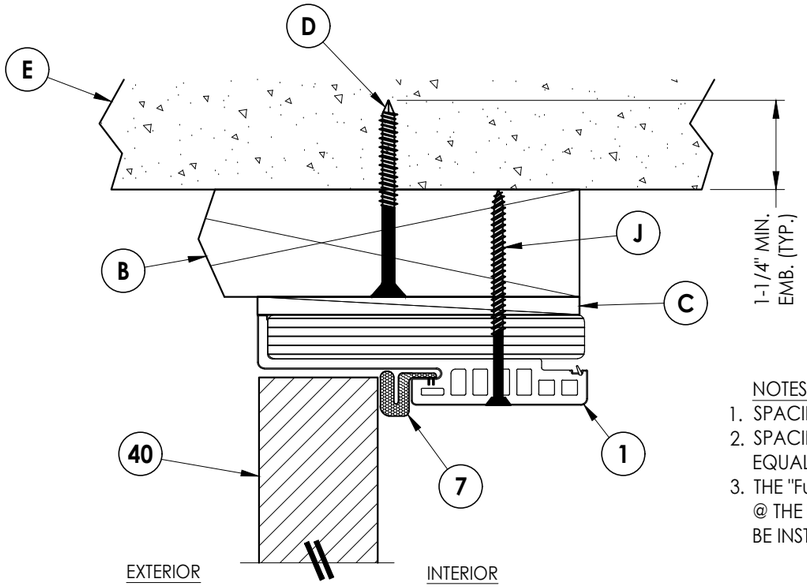

1/3 **VERTICAL CROSS SECTION**
2X Buck Construction
Outswing Shown (Inswing Similiar)

NOTES:
1. SPACING FOR ITEM J: 6" FROM ENDS (2 TOTAL).
2. SPACING FOR ITEM J: 6" FROM ENDS & 4 MORE EQUALLY SPACED ALONG SIDELITE (6 TOTAL).
3. THE "FusionFrame" 1-PIECE JAMB MAY BE INSTALLED @ THE HEAD OR SIDE JAMB. THE 2-PIECE JAMB MAY BE INSTALLED @ THE SIDE JAMBS ONLY.

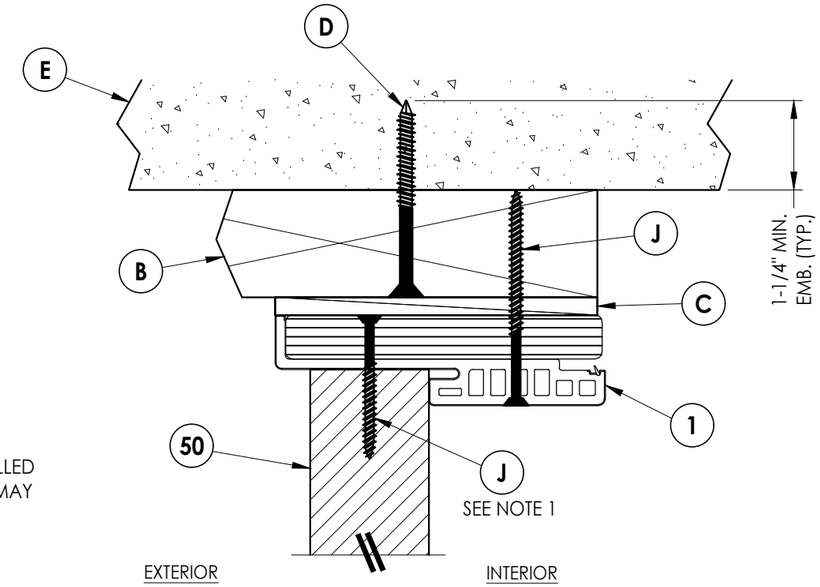

2/3 **VERTICAL CROSS SECTION**
2X Buck Construction
Outswing Shown (Inswing Similiar)

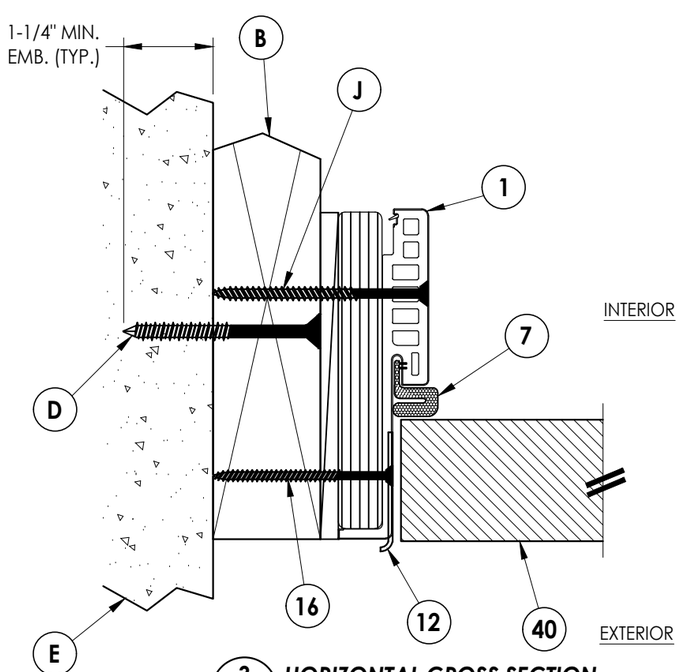

3/3 **HORIZONTAL CROSS SECTION**
2X Buck Construction
Outswing Shown (Inswing Similiar)

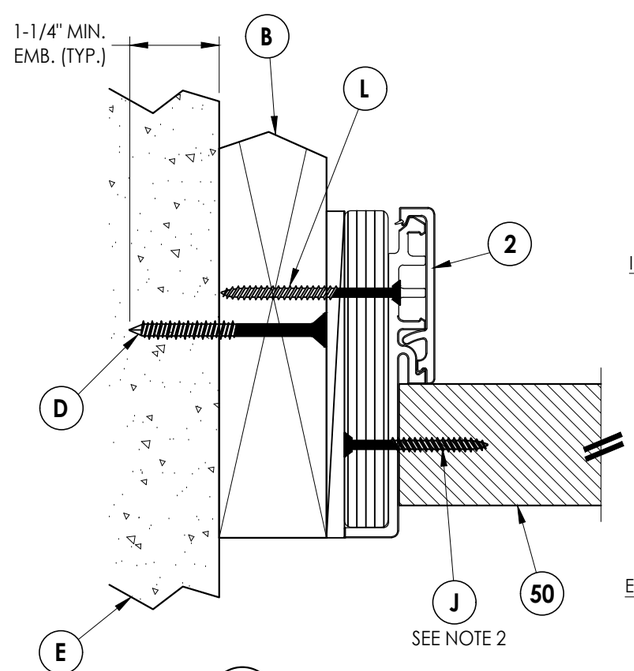

4/3 **HORIZONTAL CROSS SECTION**
2X Buck Construction
Outswing Shown (Inswing Similiar)

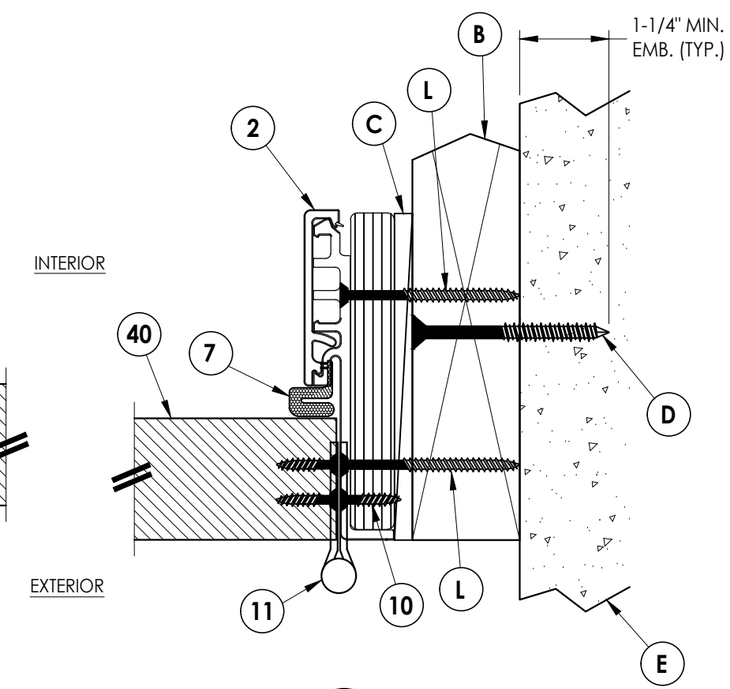

5/3 **HORIZONTAL CROSS SECTION**
2X Buck Construction
Outswing Shown (Inswing Similiar)

Documents Prepared By:
Lyndon F. Schmidt
P.E. No. 43409

RW BUILDING CONSULTANTS, INC.
P.O. Box 230, Valrico, FL 33595
Phone No.: 813.659.9197
FBPE Registry No. 9813

PRODUCT: ENDURA COMPONENTS

PART OR ASSEMBLY: HORIZONTAL & VERTICAL CROSS SECTIONS (2X BUCK)

NO.	DATE	REVISIONS	BY
3	7/06/23	UPDATE TO 8TH ED. (2023) FBC	LFS
2	8/03/20	UPDATE TO 7TH ED. (2020) FBC	LFS
1	6/18/19	REVISE D.P. FOR NEW TESTING	LFS

DATE: 4/01/19
SCALE: N.T.S.
DWG. BY: RW
CHK. BY: LFS
DRAWING NO.: FL-25610.12
SHEET 3 OF 12

© 2019 R.W. BUILDING CONSULTANTS INC.

Z:\2023 FBC Drawings\Endura Products\FL-25610 R10\FL-25610.12.dwg

NOTES:
1. SPACING FOR ITEM J: 6" FROM ENDS (2 TOTAL).
2. SPACING FOR ITEM J: 6" FROM ENDS & 4 MORE EQUALLY SPACED ALONG SIDELITE (6 TOTAL).
3. THE "FusionFrame" 1-PIECE JAMB MAY BE INSTALLED @ THE HEAD OR SIDE JAMB. THE 2-PIECE JAMB MAY BE INSTALLED @ THE SIDE JAMBS ONLY.

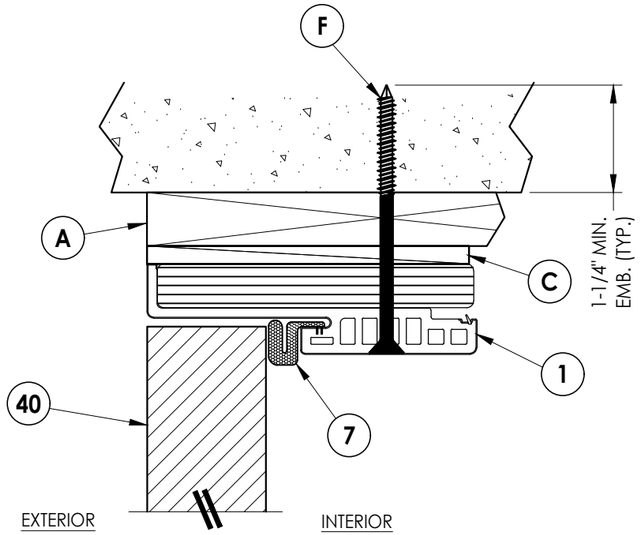

1/4 **VERTICAL CROSS SECTION**
1X Buck Construction
Outswing Shown (Inswing Similiar)

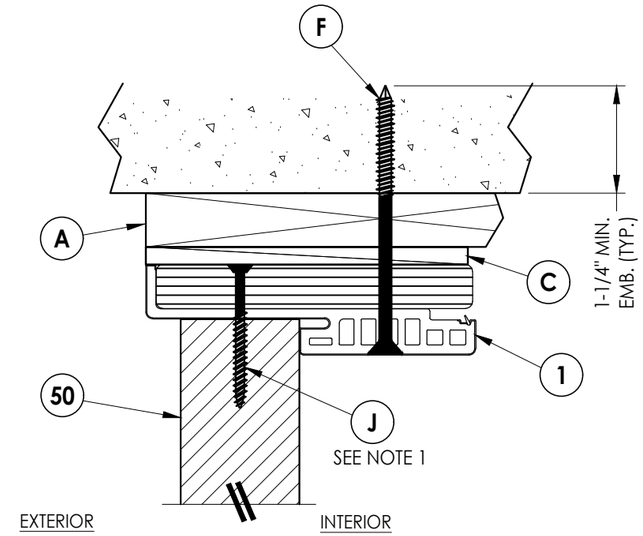

2/4 **VERTICAL CROSS SECTION**
1X Buck Construction
Outswing Shown (Inswing Similiar)

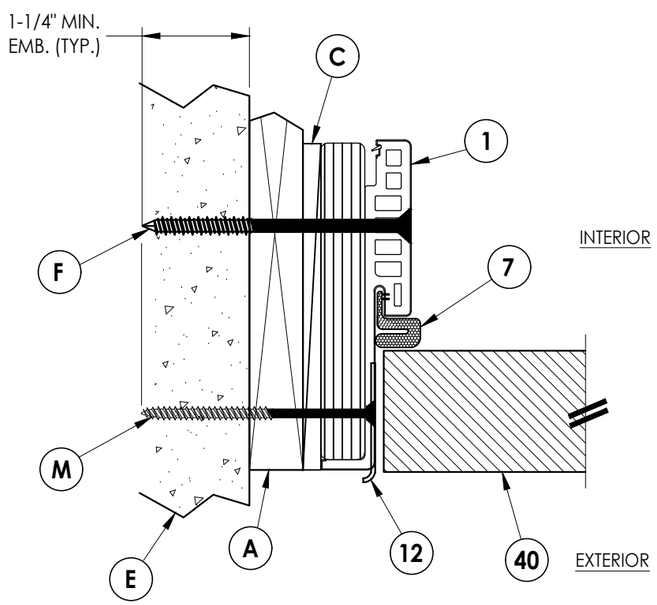

3/4 **HORIZONTAL CROSS SECTION**
1X Buck Construction
Outswing Shown (Inswing Similiar)

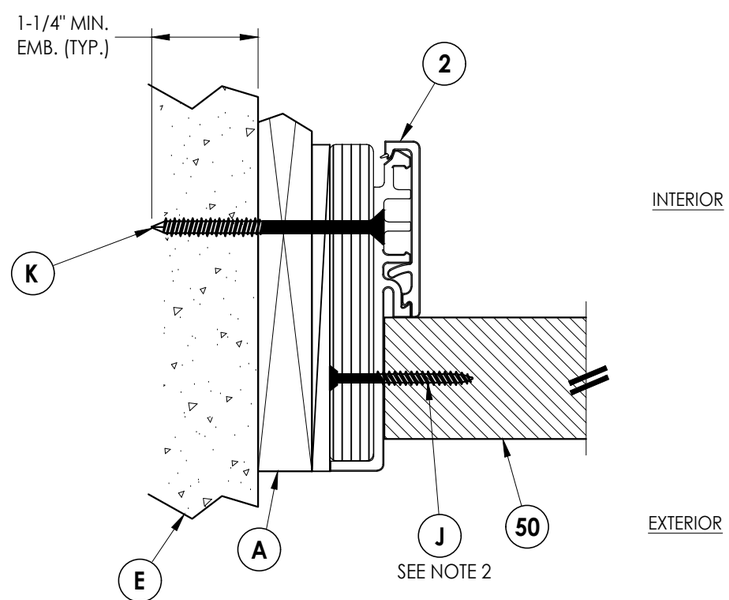

4/4 **HORIZONTAL CROSS SECTION**
1X Buck Construction
Outswing Shown (Inswing Similiar)

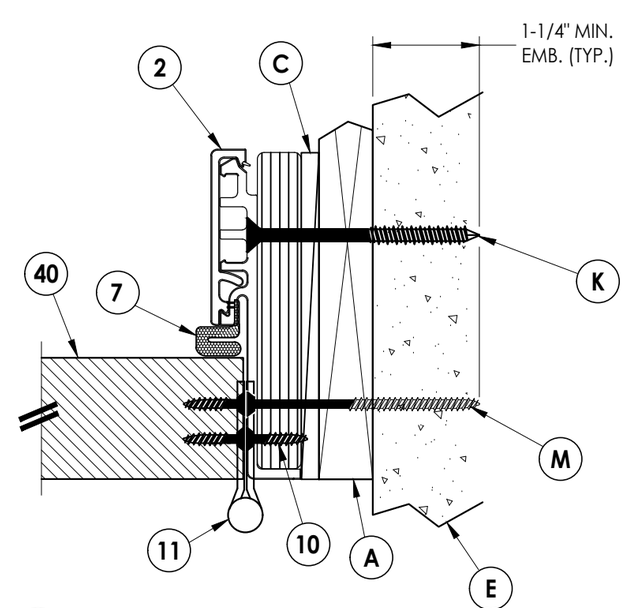

5/4 **HORIZONTAL CROSS SECTION**
1X Buck Construction
Outswing Shown (Inswing Similiar)

Documents Prepared By:
Lyndon F. Schmidt
P.E. No. 43409

RW BUILDING CONSULTANTS, INC.
P.O. Box 230, Valrico, FL 33595
Phone No.: 813.659.9197
FBPE Registry No. 9813

PRODUCT: ENDURA COMPONENTS

PART OR ASSEMBLY: HORIZONTAL & VERTICAL CROSS SECTIONS (1X BUCK)

REVISIONS

NO.	DATE		BY
3	7/06/23	UPDATE TO 8TH ED. (2023) FBC	LFS
2	8/03/20	UPDATE TO 7TH ED. (2020) FBC	LFS
1	6/18/19	REVISE D.P. FOR NEW TESTING	LFS

DATE: 4/01/19
SCALE: N.T.S.
DWG. BY: RW
CHK. BY: LFS
DRAWING NO.: FL-25610.12
SHEET 4 OF 12

© 2019 R.W. BUILDING CONSULTANTS INC.

Z:\2023 FBC Drawings\Endura Products\FL-25610 R10\FL-25610.12.dwg

NOTES:
1. SPACING FOR ITEM J: 6" FROM ENDS (2 TOTAL).
2. SPACING FOR ITEM J: 6" FROM ENDS & 4 MORE EQUALLY SPACED ALONG SIDELITE (6 TOTAL).
3. THE "FusionFrame" 1-PIECE JAMB MAY BE INSTALLED @ THE HEAD OR SIDE JAMB. THE 2-PIECE JAMB MAY BE INSTALLED @ THE SIDE JAMBS ONLY.

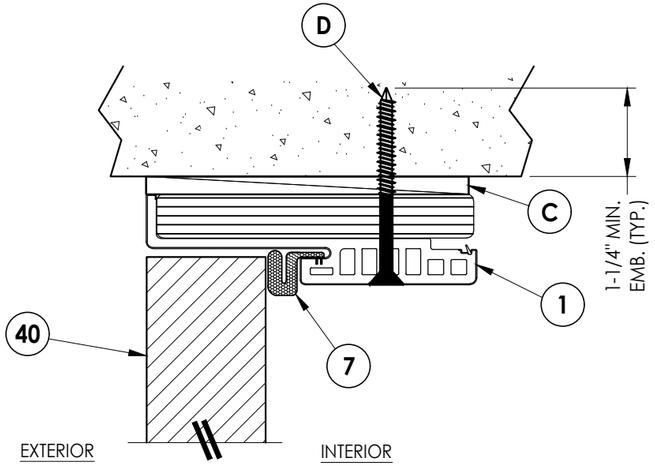

1/5 **VERTICAL CROSS SECTION**
Direct to Masonry
Outswing Shown (Inswing Similiar)

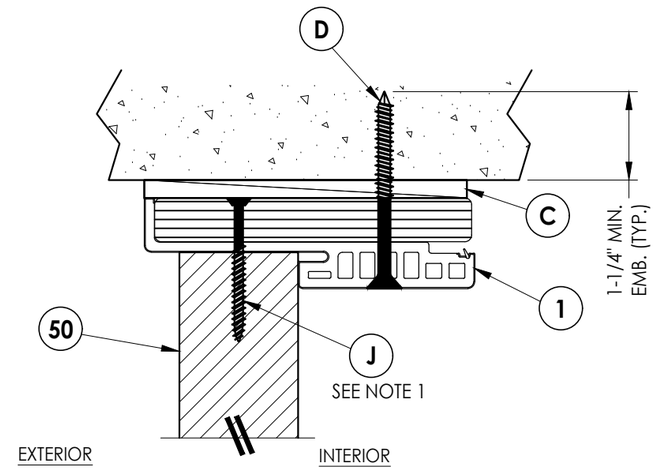

2/5 **VERTICAL CROSS SECTION**
Direct to Masonry
Outswing Shown (Inswing Similiar)

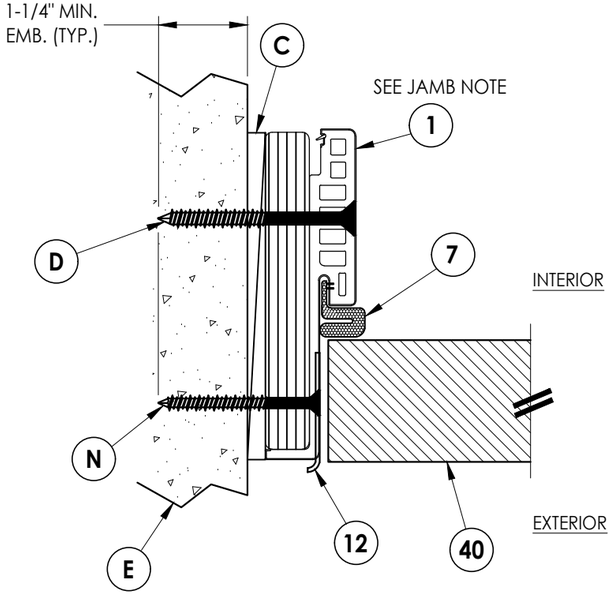

3/5 **HORIZONTAL CROSS SECTION**
Direct to Masonry
Outswing Shown (Inswing Similiar)

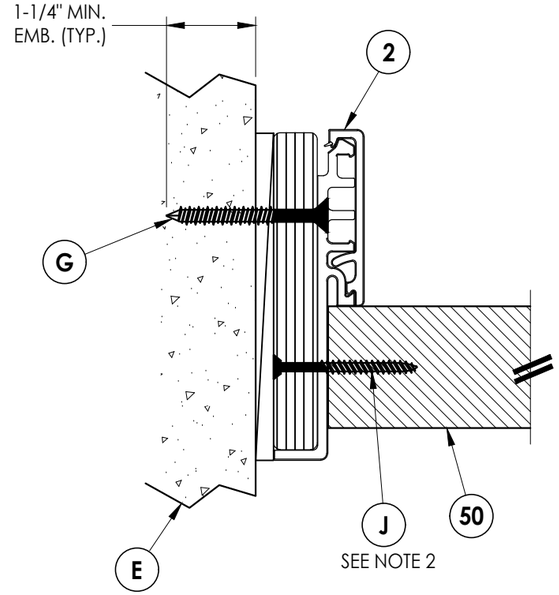

4/5 **HORIZONTAL CROSS SECTION**
Direct to Masonry
Outswing Shown (Inswing Similiar)

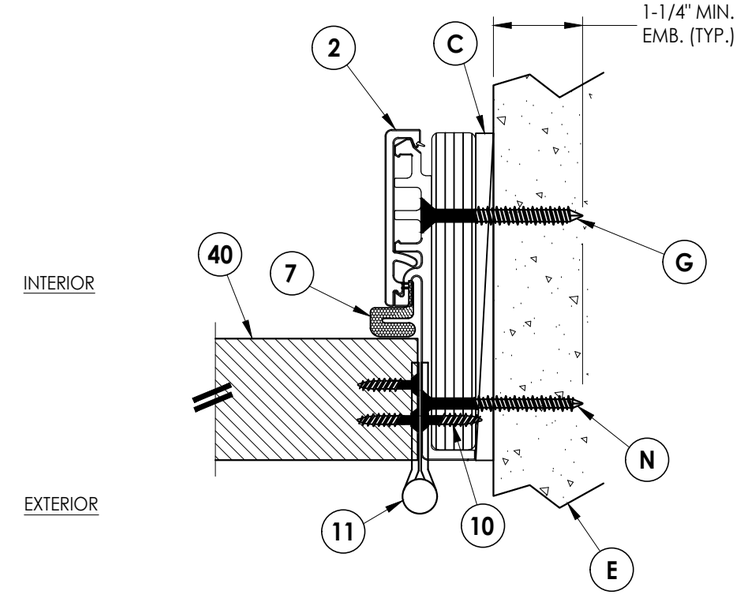

5/5 **HORIZONTAL CROSS SECTION**
Direct to Masonry
Outswing Shown (Inswing Similiar)

Documents Prepared By:
Lyndon F. Schmidt
P.E. No. 43409

RW BUILDING CONSULTANTS, INC.
P.O. Box 230, Valrico, FL 33595
Phone No.: 813.659.9197
FBPE Registry No. 9813

PRODUCT: *ENDURA COMPONENTS*

PART OR ASSEMBLY: *HORIZONTAL & VERTICAL CROSS SECTIONS (DIRECT TO MASONRY)*

REVISIONS

NO.	DATE		BY
3	7/06/23	UPDATE TO 8TH ED. (2023) FBC	LFS
2	8/03/20	UPDATE TO 7TH ED. (2020) FBC	LFS
1	6/18/19	REVISE D.P. FOR NEW TESTING	LFS

DATE: 4/01/19
SCALE: N.T.S.
DWG. BY: RW
CHK. BY: LFS
DRAWING NO.: FL-25610.12
SHEET 5 OF 12

© 2019 R.W. BUILDING CONSULTANTS INC.

Z:\2023 FBC Drawings\Endura Products\FL-25610 R10\FL-25610.12.dwg

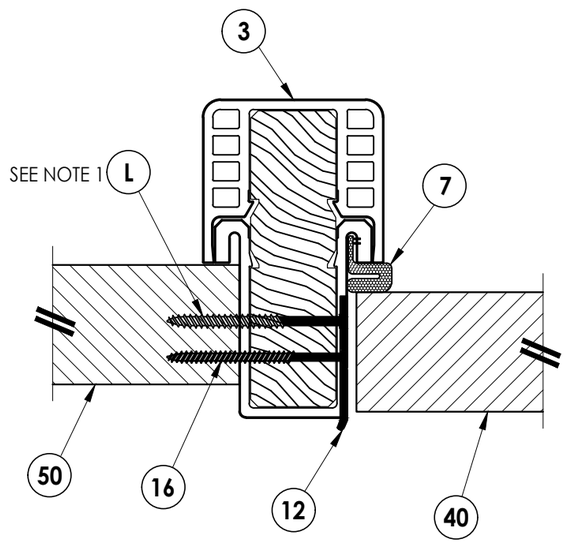

1/6 **HORIZONTAL CROSS SECTION**
Outswing Shown (Inswing Similiar)

INTERIOR

EXTERIOR

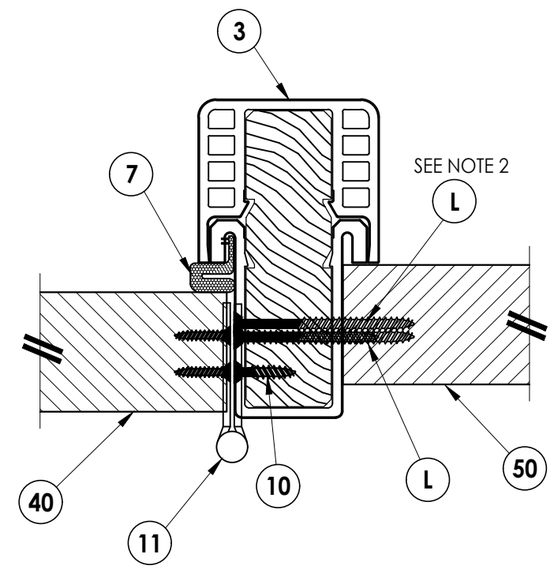

2/6 **HORIZONTAL CROSS SECTION**
Outswing Shown (Inswing Similiar)

NOTES:
1. ITEM L LOCATED AS FOLLOWS (5 TOTAL):
   FROM TOP OF MULLION DOWN @ 6", 20.5" & 35".
   FROM BOTTOM OF MULLION UP @ 6" & 20.5".
2. SPACING FOR ITEM D: CENTERED BETWEEN EACH HINGE (3 TOTAL).

Documents Prepared By:
Lyndon F. Schmidt
P.E. No. 43409
RW BUILDING CONSULTANTS, INC.
P.O. Box 230, Valrico, FL 33595
Phone No.: 813.659.9197
FBPE Registry No. 9813

PRODUCT: ENDURA COMPONENTS

PART OR ASSEMBLY: HORIZONTAL CROSS SECTIONS

NO.	DATE	REVISIONS	BY
3	7/06/23	UPDATE TO 8TH ED. (2023) FBC	LFS
2	8/03/20	UPDATE TO 7TH ED. (2020) FBC	LFS
1	6/18/19	REVISE D.P. FOR NEW TESTING	LFS

DATE: 4/01/19
SCALE: N.T.S.
DWG. BY: RW
CHK. BY: LFS
DRAWING NO.: FL-25610.12
SHEET 6 OF 12

© 2019 R.W. BUILDING CONSULTANTS INC.

Z:\2023 FBC Drawings\Endura Products\FL-25610 R10\FL-25610.12.dwg

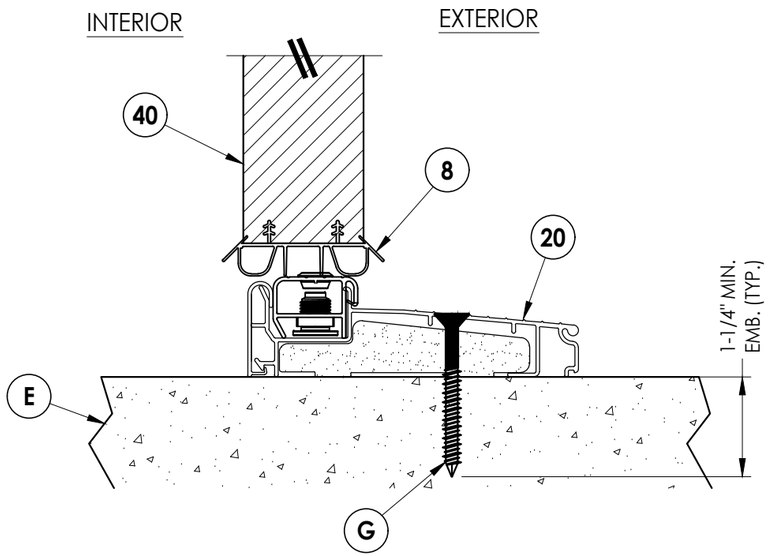

1/7 VERTICAL CROSS SECTION
Inswing Threshold

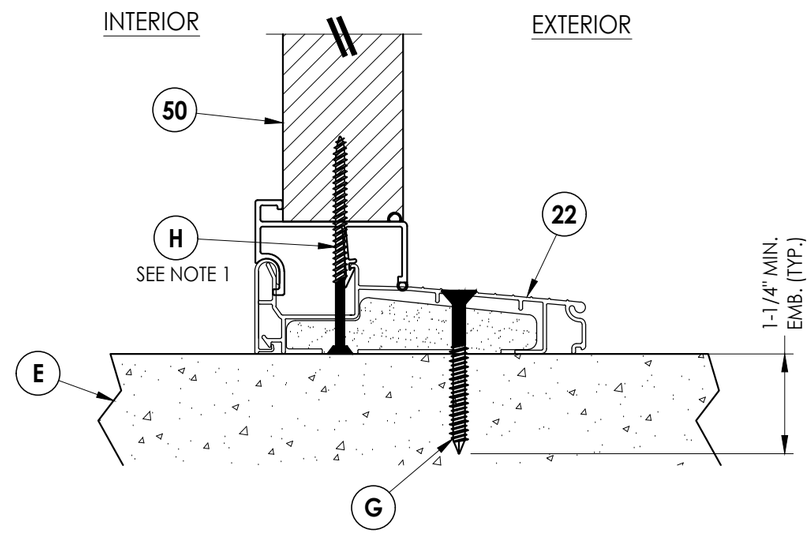

3/7 VERTICAL CROSS SECTION
Inswing Threshold

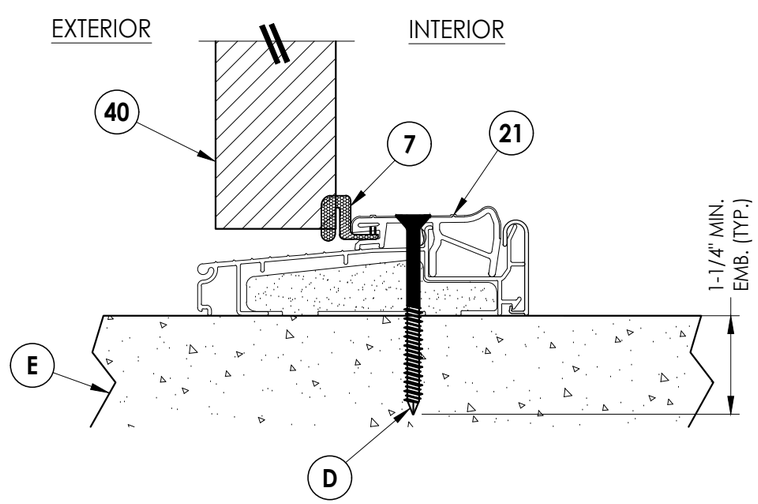

2/7 VERTICAL CROSS SECTION
Outswing Threshold

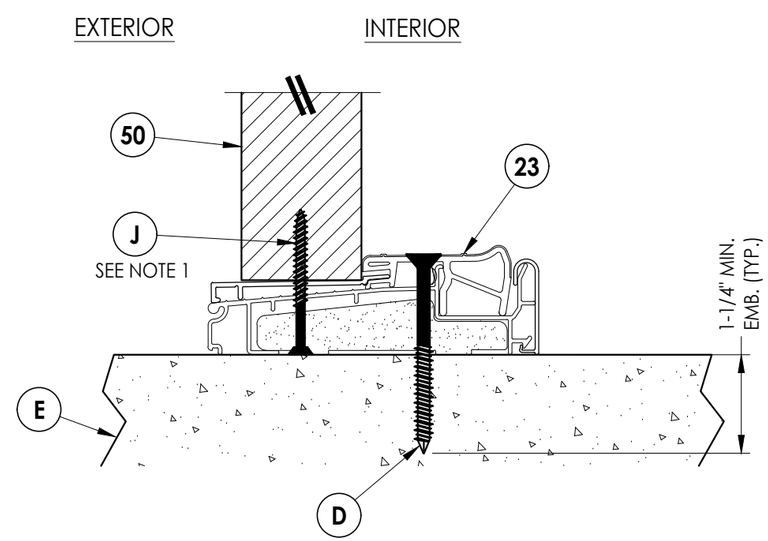

4/7 VERTICAL CROSS SECTION
Outswing Threshold

NOTE:
1. SPACING FOR ITEMS J & H: 6" FROM ENDS (2 TOTAL).

Z:\2023 FBC Drawings\Endura Products\FL-25610 R10\FL-25610.12.dwg

Documents Prepared By:
Lyndon F. Schmidt
P.E. No. 43409
RW BUILDING CONSULTANTS, INC.
P.O. Box 230, Valrico, FL 33595
Phone No.: 813.659.9197
FBPE Registry No. 9813

PRODUCT: ENDURA COMPONENTS

PART OR ASSEMBLY: VERTICAL CROSS SECTIONS (THRESHOLDS)

REVISIONS

NO.	DATE		BY
3	7/06/23	UPDATE TO 8TH ED. (2023) FBC	LFS
2	8/03/20	UPDATE TO 7TH ED. (2020) FBC	LFS
1	6/18/19	REVISE D.P. FOR NEW TESTING	LFS

DATE: 4/01/19
SCALE: N.T.S.
DWG. BY: RW
CHK. BY: LFS
DRAWING NO.: FL-25610.12
SHEET 7 OF 12

© 2019 R.W. Building Consultants Inc.

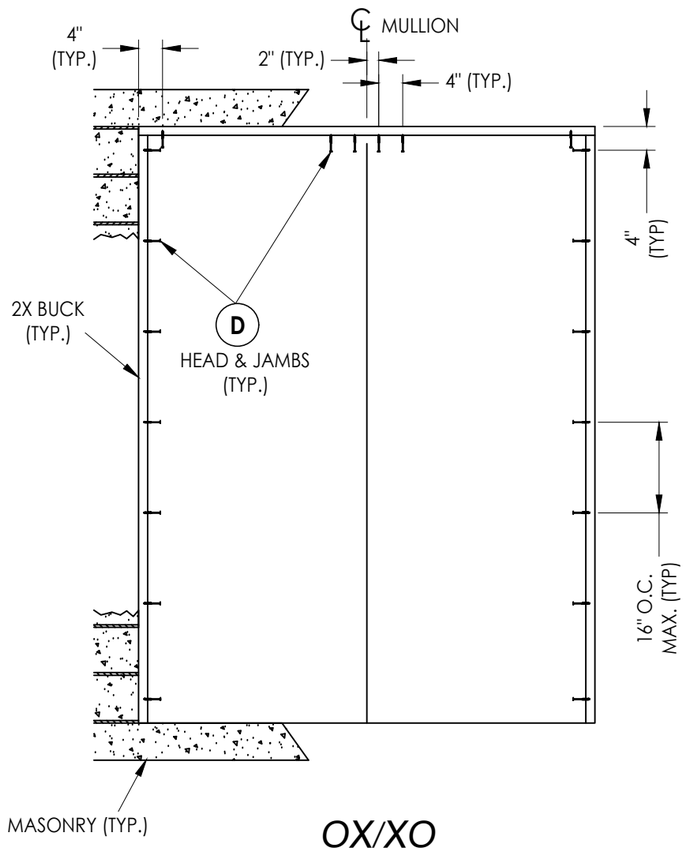

OX/XO

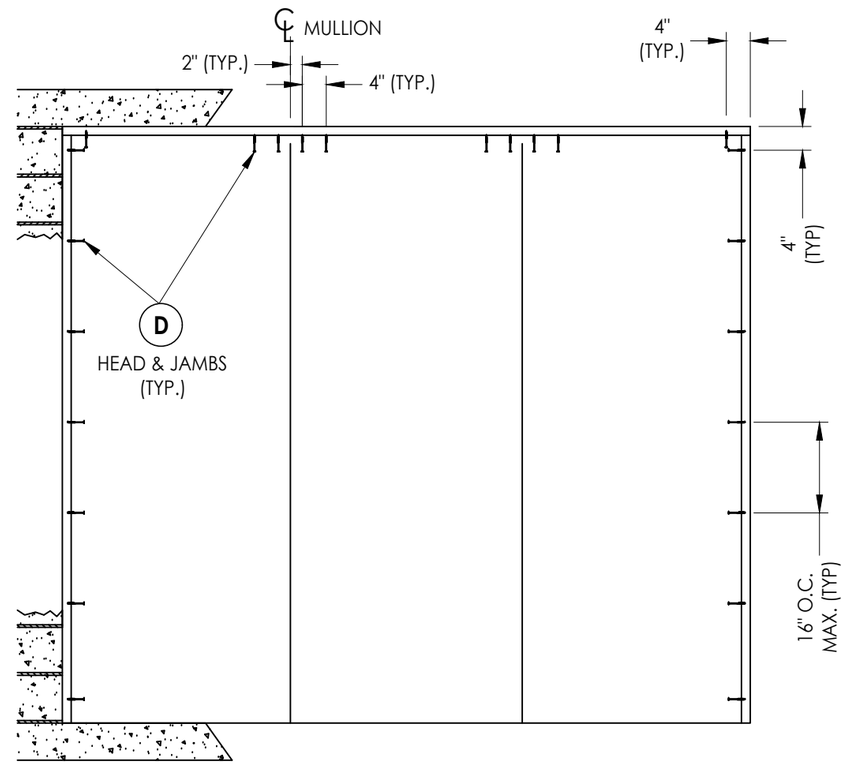

OXO

2X BUCK ANCHORING

Documents Prepared By:
Lyndon F. Schmidt
P.E. No. 43409
RW BUILDING CONSULTANTS, INC.
P.O. Box 230, Valrico, FL 33595
Phone No.: 813.659.9197
FBPE Registry No. 9813

PRODUCT: ENDURA COMPONENTS

PART OR ASSEMBLY: 2X BUCK ANCHORING (O/X, X/O, OXO)

REVISIONS

NO.	DATE		BY
3	7/06/23	UPDATE TO 8TH ED. (2023) FBC	LFS
2	8/03/20	UPDATE TO 7TH ED. (2020) FBC	LFS
1	6/18/19	REVISE D.P. FOR NEW TESTING	LFS

DATE: 4/01/19
SCALE: N.T.S.
DWG. BY: RW
CHK. BY: LFS
DRAWING NO.: FL-25610.12
SHEET 8 OF 12

© 2019 R.W. Building Consultants Inc.

Z:\2023 FBC Drawings\Endura Products\FL-25610 R10\FL-25610.12.dwg

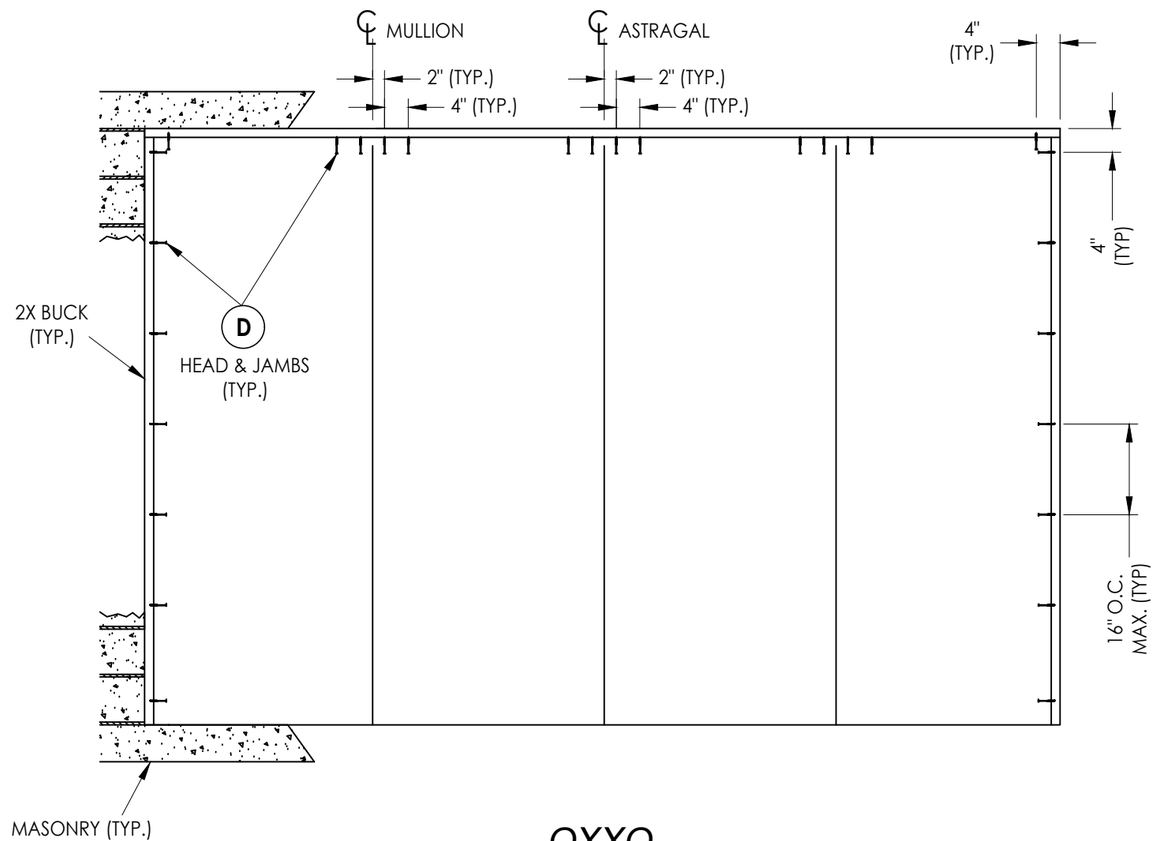

OXXO

2X BUCK ANCHORING

Documents Prepared By:
Lyndon F. Schmidt
P.E. No. 43409

RW BUILDING CONSULTANTS, INC.
P.O. Box 230, Valrico, FL 33595
Phone No.: 813.659.9197
FBPE Registry No. 9813

PRODUCT: ENDURA COMPONENTS

PART OR ASSEMBLY: 2X BUCK ANCHORING (OXXO)

NO.	DATE	REVISIONS	BY
3	7/06/23	UPDATE TO 8TH ED. (2023) FBC	LFS
2	8/03/20	UPDATE TO 7TH ED. (2020) FBC	LFS
1	6/18/19	REVISE D.P. FOR NEW TESTING	LFS

DATE: 4/01/19
SCALE: N.T.S.
DWG. BY: RW
CHK. BY: LFS
DRAWING NO.: FL-25610.12
SHEET 9 OF 12

© 2019 R.W. Building Consultants Inc.

Z:\2023 FBC Drawings\Endura Products\FL-25610 R10\FL-25610.12.dwg

*NOTE: FRAME CORNERS ATTACHED w/
(3) #7 X 2" FH WOOD SCREWS (TYP.)

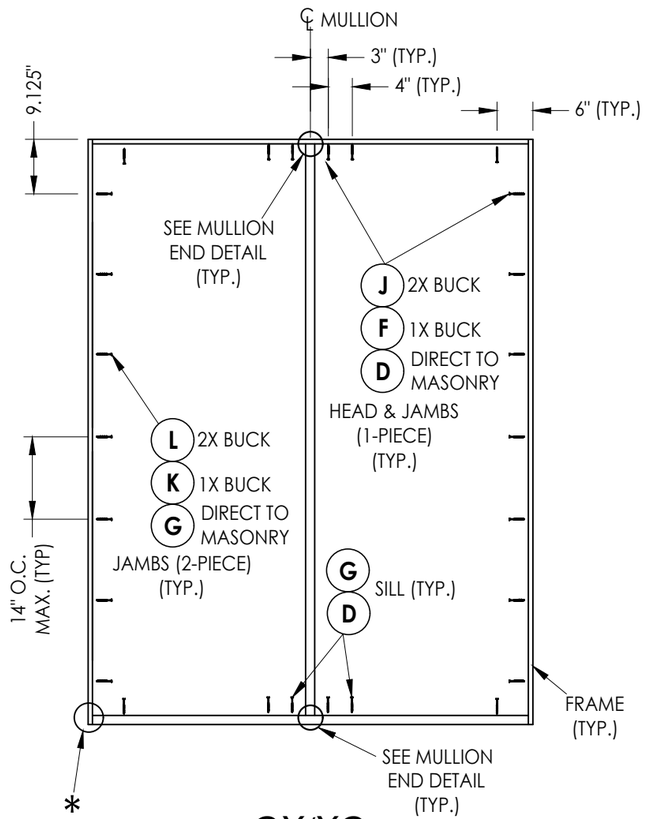

OX/XO

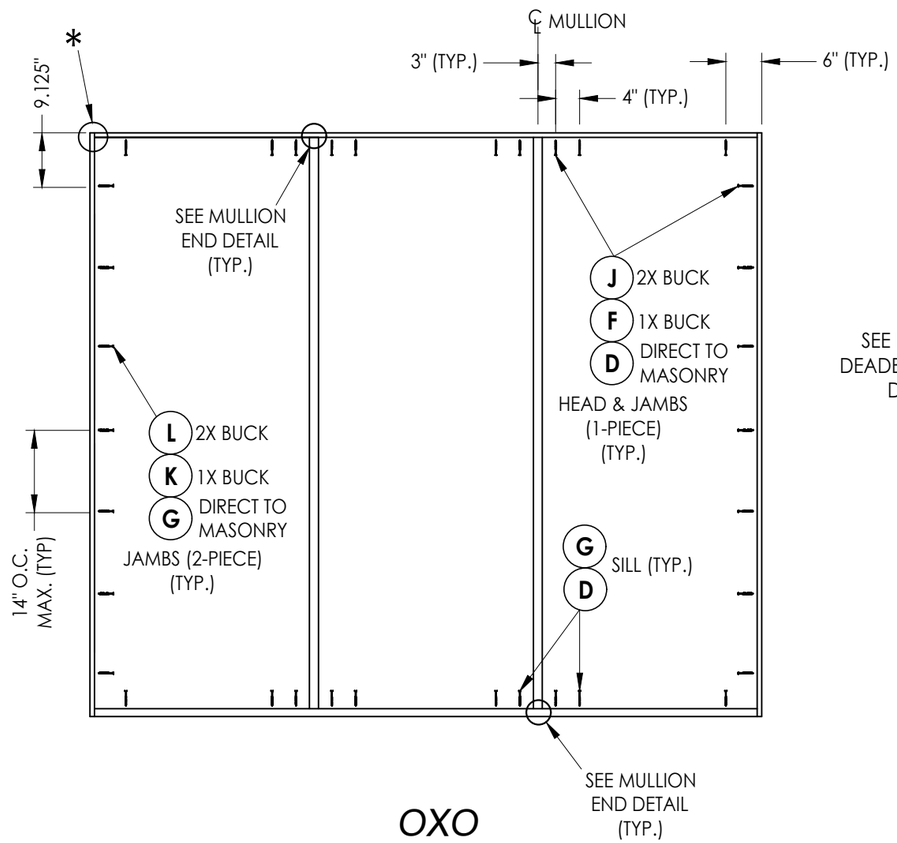

OXO

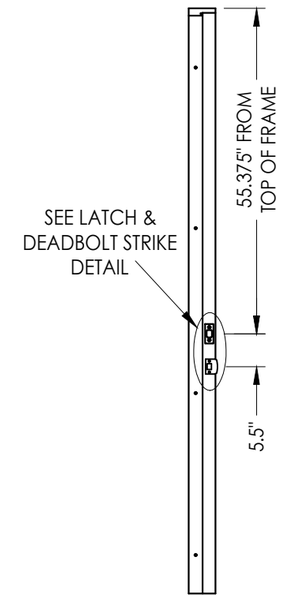

STRIKE JAMB/MULLION

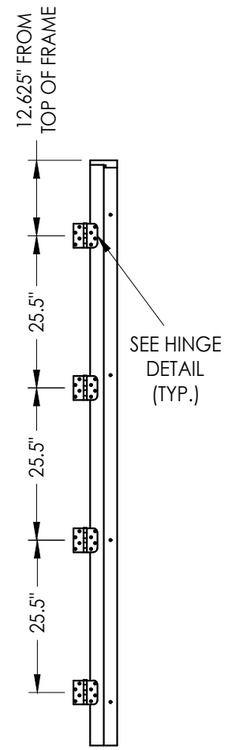

HINGE JAMB/MULLION

FRAME ANCHORING

JAMB NOTE:
THE "FusionFrame" 1-PIECE JAMB MAY BE INSTALLED @ THE HEAD OR SIDE JAMB. THE 2-PIECE JAMB MAY BE INSTALLED @ THE SIDE JAMBS ONLY.

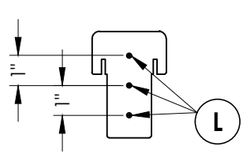

MULLION END DETAIL
@ Head & Sill

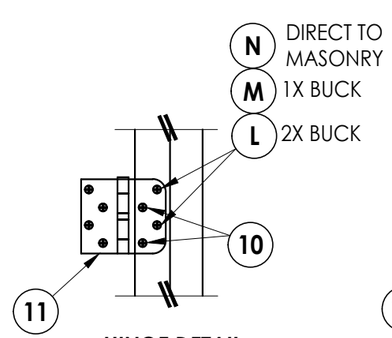

HINGE DETAIL
INSWING

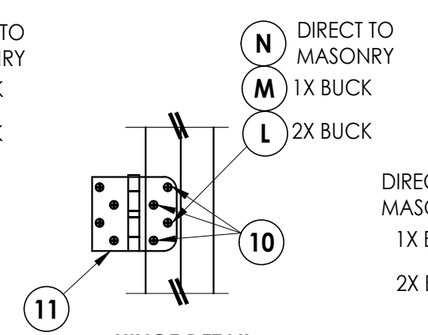

HINGE DETAIL
OUTSWING

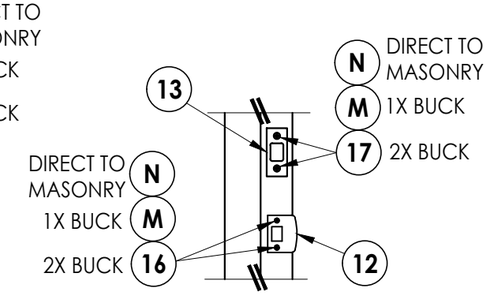

LATCH & DEADBOLT DETAIL

Documents Prepared By:
Lyndon F. Schmidt
P.E. No. 43409
RW BUILDING CONSULTANTS, INC.
P.O. Box 230, Valrico, FL 33595
Phone No.: 813.659.9197
FBPE Registry No. 9813

PRODUCT: ENDURA COMPONENTS

PART OR ASSEMBLY: FRAME ANCHORING (O/X, X/O, OXO) & HARDWARE DETAILS

REVISIONS

NO.	DATE		BY
1	6/18/19	REVISE D.P. FOR NEW TESTING	LFS
2	8/03/20	UPDATE TO 7TH ED. (2020) FBC	LFS
3	7/06/23	UPDATE TO 8TH ED. (2023) FBC	LFS

DATE: 4/01/19
SCALE: N.T.S.
DWG. BY: RW
CHK. BY: LFS
DRAWING NO.: FL-25610.12
SHEET 10 OF 12

© 2019 R.W. BUILDING CONSULTANTS INC.

Z:\2023 FBC Drawings\Endura Products\FL-25610 R10\FL-25610.12.dwg

*NOTE: FRAME CORNERS ATTACHED w/
(3) #7 X 2" FH WOOD SCREWS (TYP.)

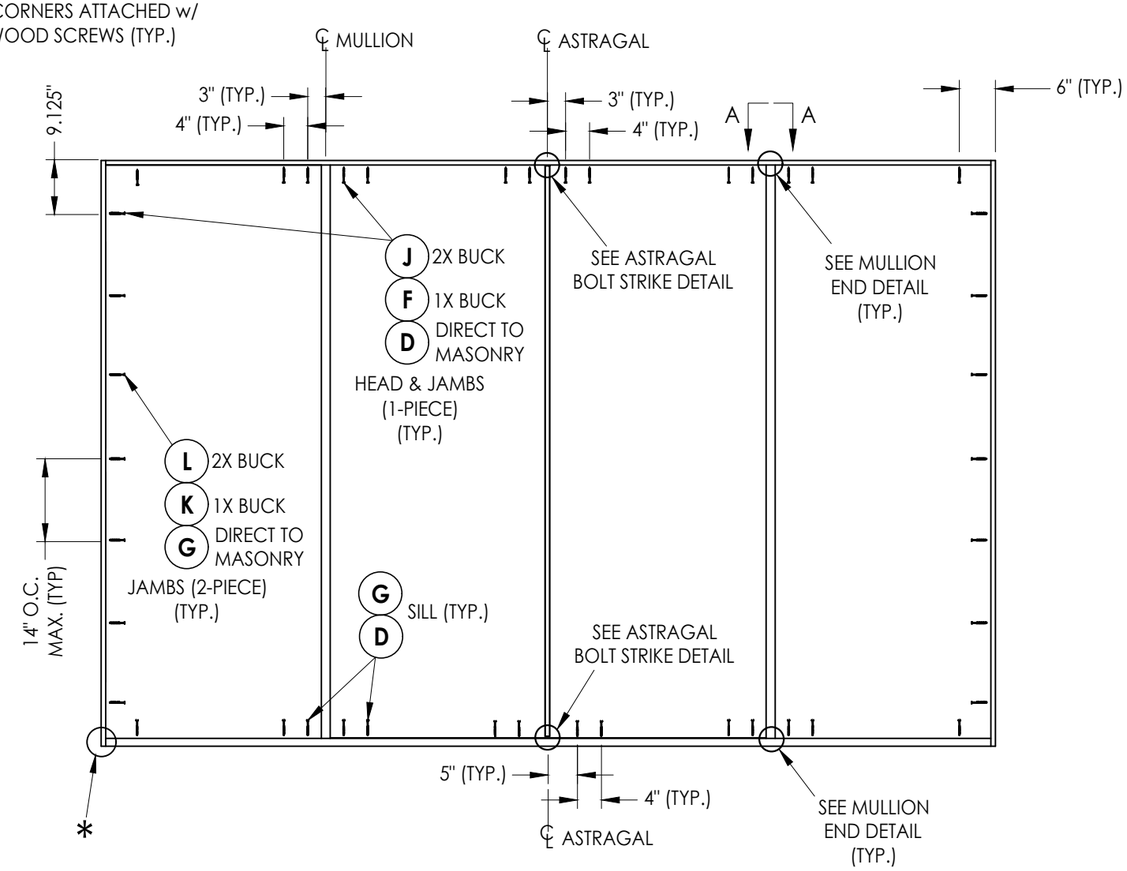

OXXO

FRAME ANCHORING

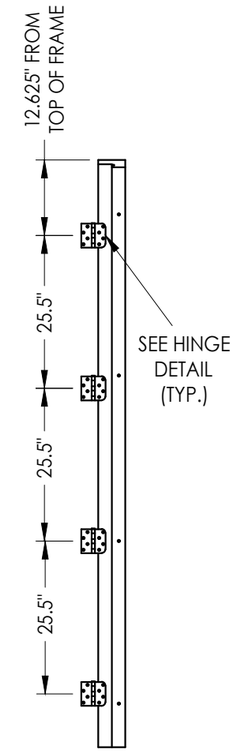

HINGE MULLION

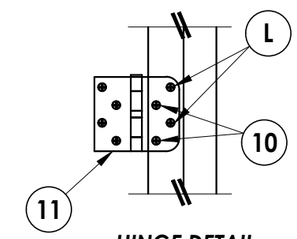

HINGE DETAIL
INSWING

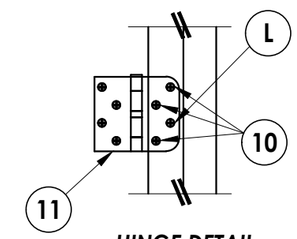

HINGE DETAIL
OUTSWING

JAMB NOTE:
THE "FusionFrame" 1-PIECE JAMB MAY BE INSTALLED @ THE HEAD OR SIDE JAMB. THE 2-PIECE JAMB MAY BE INSTALLED @ THE SIDE JAMBS ONLY.

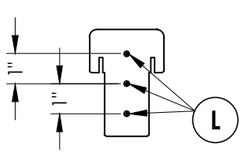

MULLION END DETAIL
@ Head & Sill

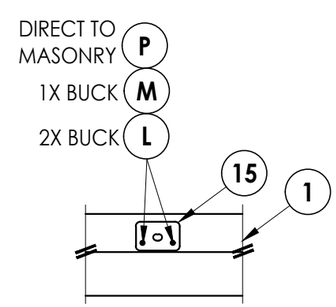

ASTRAGAL BOLT STRIKE DETAIL
@ HEAD

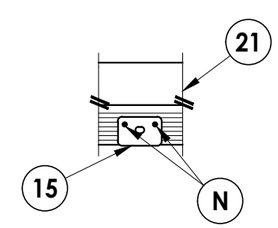

ASTRAGAL BOLT STRIKE DETAIL
@ OUTSWING SILL

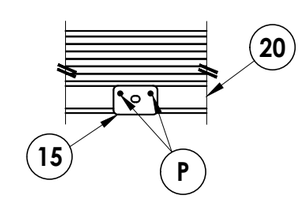

ASTRAGAL BOLT STRIKE DETAIL
@ INSWING SILL

Documents Prepared By:
Lyndon F. Schmidt
P.E. No. 43409
RW BUILDING CONSULTANTS, INC.
P.O. Box 230, Valrico, FL 33595
Phone No.: 813.659.9197
FBPE Registry No. 9813

PRODUCT: ENDURA COMPONENTS

PART OR ASSEMBLY: FRAME ANCHORING (OXXO) & HARDWARE DETAILS

NO.	DATE	REVISIONS	BY
3	7/06/23	UPDATE TO 8TH ED. (2023) FBC	LFS
2	8/03/20	UPDATE TO 7TH ED. (2020) FBC	LFS
1	6/18/19	REVISE D.P. FOR NEW TESTING	LFS

DATE: 4/01/19
SCALE: N.T.S.
DWG. BY: RW
CHK. BY: LFS
DRAWING NO.: FL-25610.12
SHEET 11 OF 12

© 2019 R.W. BUILDING CONSULTANTS INC.

Z:\2023 FBC Drawings\Endura Products\FL-25610 R10\FL-25610.12.dwg

BILL OF MATERIALS

ITEM #	DESCRIPTION	MATERIAL
A	1X BUCK (SG >= 0.55)	WOOD
B	2X BUCK (SG >= 0.55)	WOOD
C	1/4" MAX. SHIM SPACE	-
D	1/4" X 2-3/4" PFH DeWALT OR ITW CONCRETE SCREW	STEEL
E	MASONRY - 3,000 PSI MIN. CONCRETE CONFORMING TO ACI 301 OR HOLLOW BLOCK CONFORMING TO ASTM C90	CONCRETE
F	1/4" X 3-3/4" PFH DeWALT OR ITW CONCRETE SCREW	STEEL
G	1/4" X 2-1/4" PFH DeWALT OR ITW CONCRETE SCREW	STEEL
H	#10 X 3" PFH WOOD SCREW	STEEL
J	#10 X 2" PFH WOOD SCREW	STEEL
K	1/4" X 3-1/4" PFH DeWALT OR ITW CONCRETE SCREW	STEEL
L	#10 X 2-1/2" PFH WOOD SCREW (MIN. EMBEDMENT: 1-1/2" @ JAMBS, 1" @ HEAD)	STEEL
M	3/16" X 3-1/4" PFH ITW CONCRETE SCREW	STEEL
N	3/16" X 2-1/4" PFH ITW CONCRETE SCREW	STEEL
P	3/16" X 2-3/4" PFH ITW CONCRETE SCREW	STEEL
1	HEAD/SIDE JAMB (1-PIECE) (ENDURA "FusionFrame")	COMP/LVL
2	SIDE JAMB (2-PIECE) (ENDURA "FusionFrame")	COMP/LVL
3	MULLION (ENDURA "FusionFrame")	COMP/WOOD
7	WEATHERSTRIP	FOAM
8	DOOR SWEEP	VINYL
10	#9 X 3/4" PFH WOOD SCREW	STEEL
11	4" X 4" HINGE	STEEL
12	LATCH STRIKE PLATE	STEEL
13	DEADBOLT STRIKE PLATE	STEEL
15	ASTRAGAL SHOOTBOLT STRIKE PLATE	STEEL
16	#8 X 2-1/2" PFH WOOD SCREW	STEEL
17	#12 X 2-1/2" PFH WOOD SCREW	STEEL
20	INSWING ADJUSTABLE THRESHOLD	ALUM/COMP
21	OUTSWING THRESHOLD	ALUM/COMP
22	INSWING THRESHOLD w/ SIDELITE ADAPTER	ALUM/COMP
23	OUTSWING THRESHOLD w/ SIDELITE ADAPTER	ALUM/COMP
40	DOOR PANEL (BY OTHERS - SEE GENERAL NOTE 5, SHEET 1)	-
50	SIDELITE PANEL (BY OTHERS - SEE GENERAL NOTE 5, SHEET 1)	-

CONCRETE ANCHOR NOTES:

1. *Concrete anchor locations at the corners may be adjusted to maintain the min. edge distance to mortar joints.*
2. *Concrete anchor locations noted as "MAX. ON CENTER" must be adjusted to maintain the min. edge distance to mortar joints, additional concrete anchors may be required to ensure the "MAX. ON CENTER" dimension are not exceeded.*
3. *Concrete anchor table:*

ANCHOR TYPE	ANCHOR SIZE	MIN. EMBEDMENT	MIN. CLEARANCE TO MASONRY EDGE	MIN. CLEARANCE TO ADJACENT ANCHOR
ITW TAPCON®	3/16"	1-1/4"	3"	1-1/2"
ITW TAPCON®	1/4"	1-1/4"	2"	4"
DeWALT ULTRACON+®	1/4"	1-1/4"	1"	4"

WOOD SCREW INSTALLATION NOTES:

1. *Maintain a minimum 5/8" edge distance, 1" end distance, & 1" o.c. spacing of wood screws to prevent the splitting of wood.*

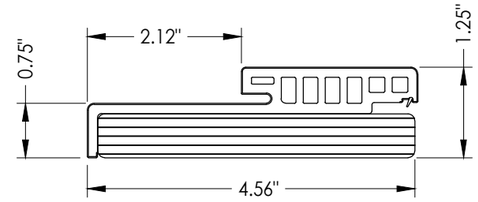

1 **HEAD/SIDE JAMB** (1-PIECE)

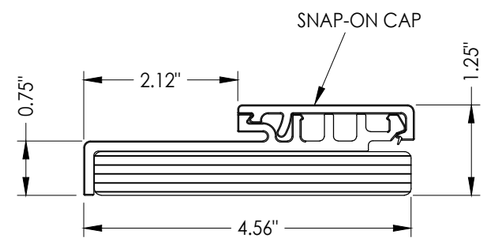

2 **SIDE JAMB** (2-PIECE)

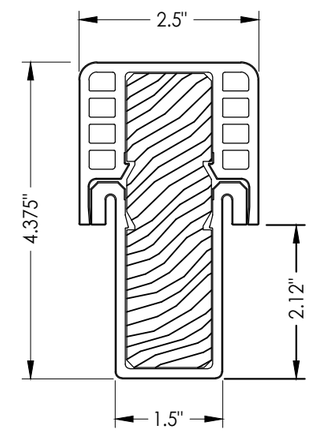

3 **MULLION**

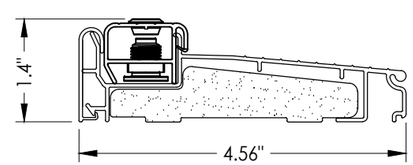

20 **INSWING THRESHOLD** ENDURA

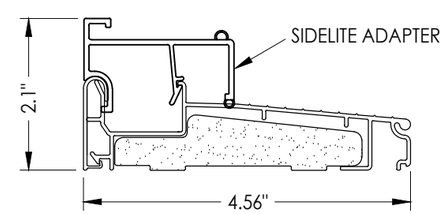

22 **INSWING THRESHOLD w/ SIDELITE ADAPTER** ENDURA

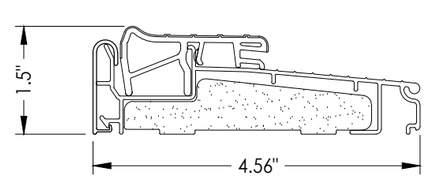

21 **OUTSWING THRESHOLD** ENDURA

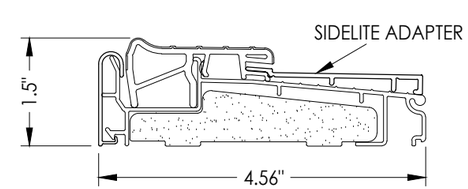

23 **OUTSWING THRESHOLD w/ SIDELITE ADAPTER** ENDURA

Documents Prepared By:
Lyndon F. Schmidt
P.E. No. 43409
RW BUILDING CONSULTANTS, INC.
P.O. Box 230, Valrico, FL 33595
Phone No.: 813.659.9197
FBPE Registry No. 9813

PRODUCT: ENDURA COMPONENTS

PART OR ASSEMBLY: BILL OF MATERIALS & COMPONENTS

REVISIONS

NO.	DATE		BY
3	7/06/23	UPDATE TO 8TH ED. (2023) FBC	LFS
2	8/03/20	UPDATE TO 7TH ED. (2020) FBC	LFS
1	6/18/19	REVISE D.P. FOR NEW TESTING	LFS

DATE: 4/01/19
SCALE: N.T.S.
DWG. BY: RW
CHK. BY: LFS
DRAWING NO.: FL-25610.12
SHEET 12 OF 12

© 2019 R.W. BUILDING CONSULTANTS INC.

Z:\2023 FBC Drawings\Endura Products\FL-25610 R10\FL-25610.12.dwg